Proceedings of the 36th Chinese Control Conference
July 26-28, 2017, Dalian, China

Dynamic Event-Triggered Control for Networked Switched Linear Systems

Pengfei Li[1], Yu Kang[1,2], Yun-Bo Zhao[3], Jian Zhou[1]

1. Department of Automation, University of Science and Technology of China, Hefei 230027, P. R. China
E-mail: puffylee@mail.ustc.edu.cn

2. the State Key Laboratory of Fire Science, University of Science and Technology of China, Hefei 230027, P. R. China
E-mail: kangduyu@ustc.edu.cn

3. College of Information Engineering, Zhejiang University of Technology, Hangzhou, 310014, P. R. China
E-mail: ybzhao@zjut.edu.cn

Abstract: A class of discrete-time networked switched control systems are investigated with event-triggered control. The closed-loop system is formulated as switched linear systems with time-varying delays, based on which the exponential stability conditions are obtained under the time delay system framework. The co-design conditions of the control gain and the triggering parameters are proposed. Finally, a comparison between the static event-triggered mechanism and the dynamic one is illustrated by a numerical example.

Key Words: Networked switched control systems, Delay system method, Event-triggered, Co-design

1 Introduction

Switched systems are composed of finite subsystems and a switching signal governing the switching among these subsystems, and thus have hybrid dynamics [1–3]. Such systems can be found in many real world application, such as chemical processes, switched circuits, flight control systems, mechanical systems and so on. In practice, to reduce the installation and maintenance cost and protect against threats, these systems and processes are often implemented with the communication networks. That is, the control loop of the controlled plant is closed by a digital network [4, 5]. In this scenario, the overall systems can be formulated as networked switched control systems (NSCSs).

NSCSs are a special class of networked control systems (NCSs) with the controlled plant being switched systems. In conventional NCSs, the communication between the sensors, controllers and actuators is usually over wired networks. For wired communication energy saving is not an urgent need, and therefore the time-triggered control scheme is often adopted. But for battery powered wireless devices, the limited energy imposes the need for efficient energy usage. Indeed, packet transmission can be very power expensive [6]. To avoid unnecessary transmission, event-triggered control (ETC) scheme is proposed [7–9], in which the controllers execute aperiodically according to the system state and its variation. In [10], periodic event-triggered control scheme which checks the event-triggering condition periodically and decides whether or not to transmit the packet at every sampling time, is designed to reducing the amount of transmission (also called release times). In [11], the author extends the static event-triggered mechanism (SETM) [7] to a novel dynamic event-triggered mechanism (DETM), leading to a further reduction of communications. The discrete-time version of DETM can be seen in [12]. In DETM, an internal dynamic variable determined by a differential equation or difference equation, together with system state and its variation, is used to construct the new triggering condition. When considering the ETC over lossy network, the network-induced delays and packet dropout which deteriorate the performance of control systems should not be neglected, especially for the wireless network. It is worth pointing out here that the delays and packet dropout may make it intractable to analyze the performance of the systems based on the ETM proposed in these works. In [13], by proposing a SETM and modelling the closed-loop systems as linear systems with time-varying delays, the stability and control synthesis results are given in terms of linear matrix inequalities (LMIs). By the similar method, the networked Markovian jump linear systems with SETM are investigated in [14]. However, the NSCSs with DETM has not been studied while its theoretical results are appealing and promising, which motivates our current work.

In this work, we focus on the stability and stabilization issues for the NSCSs based on DETM. The network-induced delays and packet dropout are unified into equivalent time-varying delays. Compared with earlier research [13, 14], the difference and contributions can be summarized as follows: 1) A new mode-dependent DETM is designed to reduce the release time while guaranteeing the system performance. 2) Exponential stability conditions for each delayed subsystem are derived. 3) Criteria for co-designing the state-feedback control gains and the undetermined parameters of DETM are obtained. 4) A comparison between SETM and DETM is given by a numerical example.

The remaining of this paper is organized as follows. Section 2 gives the description of the systems and formulates the problem. In Section 3, we derive the stability conditions and obtain the controller design result. Illustrate examples are given in Section 4.

Notation: The notations used in this paper are quite standard. $\mathbb{R}^n$ denotes the n-dimensional Euclidean space, $\mathbb{N}^+$

This work was supported in part by the National High-tech R&D Program of China (863 Program 2014AA06A503), the National Natural Science Foundation of China (61422307, 61673361 and 61673350), the Scientific Research Staring Foundation for the Returned Overseas Chinese Scholars and Ministry of Education of China. Authors also gratefully acknowledge supports from the Youth Top-notch Talent Support Program, the 1000-talent Youth Program and the Youth Yangtze River Scholar.

denotes the set of non-negative integers. $X > 0$ ($X < 0$) for any symmetric matrix means that the matrix is positive definite (negative definite). I is an identity matrix with appropriate dimension. $\mathcal{C}^n$ denotes the n-dimensional continuous function space. $diag[A_1, A_2, \ldots, A_n]$ represents a block diagonal matrix with blocks $\{A_1, A_2, \ldots, A_n\}$. $||.||$ denotes the Euclidean norm of a vector.

2 Problem Formulation

2.1 The description of NSCS

Consider the NSCS setup in Fig.1. The discrete-time switched linear systems are described by

$$x(k+1) = A_{\sigma(k)}x(k) + B_{\sigma(k)}u(k) \tag{1}$$

where $x(k) \in \mathbb{R}^n$ is the system state with $x(0) = x_0$ as its initial state, $u(k) \in \mathbb{R}^m$ is the control input, $A_{\sigma(k)}$ and $B_{\sigma(k)}$ are system matrices with appropriate dimensions, and $\sigma(k)$ is a piecewise constant function of k named switching signal that takes value in a finite set $\mathcal{M} = \{1, 2, \ldots, M\}$. Denote the switching time sequence as $k_0 < k_1 < \cdots < k_l < \ldots$ and let $k_0 = 0$. For notational simplicity, if $\sigma(k) = i$, a matrix $P_{\sigma(k)}$ is denoted by P_i. For instance, we denote $A_{\sigma(k)}$ and $B_{\sigma(k)}$ by A_i and B_i, respectively.

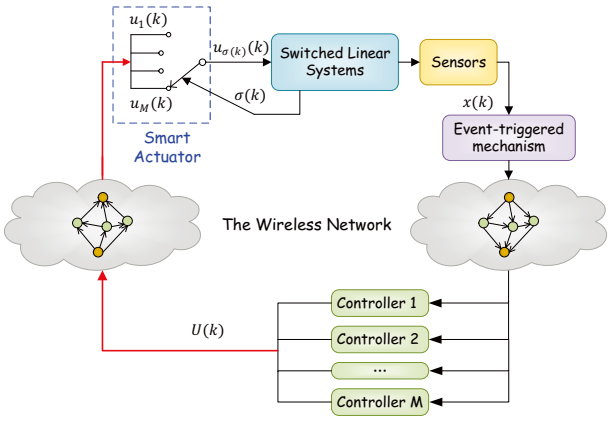

Fig. 1: The structure of NSCSs

Suppose that the sensors are clock-driven. At each time step, the sensors measure the system state $x(k)$ and then the event-triggered mechanism decides whether or not to send the measurement to the remote controllers. After receiving the state value, the controllers calculate the control signals for each mode, encapsulate them into one packet and then transmit it to the actuator. Suppose that the mode of the activated subsystem is available to smart actuator, then the smart actuator can always select a proper control signal. The packet transmitted in the imperfect network will suffer from delays and packet dropout. Generally, delays and packet dropout can be modelled as an equivalent time-varying delay, see e.g. [15–17]. Assume that the equivalent delay is τ_k at time k, and it is bounded, i.e. $\tau_k \in [0, \bar{\tau}]$.

The transmit instants are represented as $\{s_l\}_{l=0}^{\infty}$, where $s_0 = 0$ is the initial time. The actuator receives the packet of system state $x(s_l)$ at $s_l + \tau_{s_l}$ due to the delay, and receives the next packet at $s_{l+1} + \tau_{s_{l+1}}$. If we consider the state-feedback control law

$$u(k) = K_i x(s_l), k \in [s_l + \tau_{s_l}, s_{l+1} + \tau_{s_{l+1}})$$

then, the closed-loop systems can be formulate as

$$x(k+1) = A_i x(k) + B_i K_i x(s_l), \quad k \in [s_l + \tau_{s_l}, s_{l+1} + \tau_{s_{l+1}}) \tag{2}$$

2.2 The dynamic event-triggered control

First, we introduce the SETM that is widely used in many works [13, 14, 18]. The triggering instant sequence $\{s_l\}_{l=0}^{\infty}$ for SETM is defined as follows

$$\begin{aligned} s_0 &= 0 \\ s_{l+1} &= \inf_{k > s_l} \{\epsilon_i x^T(k)\Phi_i x(k) \le e^T(k)\Phi_i e(k)\} \end{aligned} \tag{3}$$

where $e(k) = x(s_l) - x(k)$ can be seen as an error variable.

It can be shown that based on this SETM (3), the system state will meet $\epsilon_i x^T(k)\Phi_i x(k) > e^T(k)\Phi_i e(k)$ for all $k \in \mathbb{N}$ and $i \in \mathcal{M}$.

In what follows, we extend the DETM proposed in [11, 12]. The mode-dependent DETM is defined as

$$\begin{aligned} s_0 =& 0 \\ s_{l+1} =& \inf_{k > s_l} \{\eta(k) \\ &+ \theta(\epsilon_i x^T(k)\Phi_i x(k) - e^T(k)\Phi_i e(k)) \le 0\} \end{aligned} \tag{4}$$

where $e(k) = x(s_l) - x(k)$, and $\eta(k)$ is determined by the following difference equation

$$\eta(k+1) = \beta\eta(k) + \epsilon_i x^T(k)\Phi_i x(k) - e^T(k)\Phi_i e(k) \tag{5}$$

with the initial value $\eta(0) = \eta_0 > 0$.

Similarly, for any $k \in \mathbb{N}$ and $i \in \mathcal{M}$, we have

$$\eta(k) + \theta(\epsilon_i x^T(k)\Phi_i x(k) - e^T(k)\Phi_i e(k)) > 0.$$

That is

$$\epsilon_i x^T(k)\Phi_i x(k) - e^T(k)\Phi_i e(k) > -\frac{1}{\theta}\eta(k) \tag{6}$$

Substituting (6) into (5), it yields

$$\eta(k+1) > (\beta - \frac{1}{\theta})\eta(k). \tag{7}$$

If $\beta - \frac{1}{\theta} > 0$ and $\eta_0 > 0$, then iteratively, we have $\eta(k) > 0$ for all $k \in \mathbb{N}$.

Remark 1 *Noting that the DETM in* (4), $\epsilon_i x^T(k)\Phi_i x(k) > e^T(k)\Phi_i e(k)$ *may not always hold because of the positive definiteness of* $\eta(k)$. *Compare with the SETM* (3), *this fact will further enlarge the inter-execution time intervals* $s_{l+1} - s_l$ *(or triggering interval) and reduce the release times of the sensors.*

2.3 Some preliminaries

Divide the interval $[s_l + \tau_{s_l}, s_{l+1} + \tau_{s_{l+1}})$ into $m+1$ part, that is

$$[s_l + \tau_{s_l}, s_{l+1} + \tau_{s_{l+1}}) = \cup_{j=0}^{m} \mathcal{I}_j \tag{8}$$

where $\mathcal{I}_j = [s_l + j + \tau_{s_l+j}, s_l + j + 1 + \tau_{s_l+j+1})$, $j = 0, 1, \ldots, m$.

Define a piecewise function $d(k)$ as,

$$d(k) = \begin{cases} k - s_l & k \in \mathcal{I}_0 \\ k - s_l - j & k \in \mathcal{I}_j \\ k - s_l - m & k \in \mathcal{I}_m \end{cases} \tag{9}$$

From (8), we can conclude that

$$0 \leq \tau_{s_l+j} \leq d(k) \leq 1 + \tau_{s_l+j+1} \leq 1 + \bar{\tau} \triangleq d_M \tag{10}$$

By introducing the error variable $e(k) = x(s_l) - x(s_l + j)$ for $k \in \mathcal{I}_j$ and based on (10), (3) and (4), we have

$$\epsilon_i x^T(k - d(k))\Phi_i x(k - d(k)) - e^T(k)\Phi_i e(k) > 0 \tag{11}$$

and

$$\eta(k) + \theta(\epsilon_i x^T(k - d(k))\Phi_i x(k - d(k)) - e^T(k)\Phi_i e(k)) > 0 \tag{12}$$

respectively.

From the definition of $d(k)$ and $e(k)$, the closed-loop systems (2) can be converted into the following switched systems with time-varying delays

$$\begin{aligned} x(k+1) &= A_i x(k) + B_i K_i x(k - d(k)) + B_i K_i e(k) \\ x(l) &= \varphi(l),\ l \in \{-d_M, -d_M + 1, \ldots, 0\} \end{aligned} \tag{13}$$

with $\varphi(l) \in \mathcal{C}^n$ being a vector-valued initial function. So the delay system method can be applied to analyze such systems. In the following, we introduce some necessary definitions and lemma.

Definition 1 *A control system is said to be exponentially stable if the system states meet the following condition*

$$||x(k)|| \leq K\|\mathcal{X}(0)\|\lambda^{-k}, \forall k > 0 \tag{14}$$

where $\lambda > 1$ is the decay rate, K is a constant and $\|\mathcal{X}(0)\|$ is the initial condition which equal to $\|x_0\|$ for delay-free systems or equal to $\|\varphi\| \triangleq \sup_{-d_M \leq l \leq 0} \|x(l)\|$ for delayed systems.

Definition 2 (ADT) *For a switching signal $\sigma(k)$ and an interval $[k_1, k_2]$ with $k_1 < k_2$, if for any given N_0 and τ_a, the switching numbers $N_\sigma(k_2, k_1)$ during $[k_1, k_2]$ meet the following condition*

$$N_\sigma(k_2, k_1) \leq N_0 + \frac{k_2 - k_1}{\tau_a} \tag{15}$$

then, we say that the average dwell time (ADT) of $\sigma(k)$ is τ_a, and N_0 is the chatter bound of $\sigma(k)$.

The following lemma is the discrete-time version of Jensen inequality.

Lemma 2.1 *For a given positive definite matrix W, two positive integer r_0, r satisfying $r_0 \leq r$, and vector function $x(i)$, we have the following inequality*

$$\tilde{r} \sum_{i=r_0}^{r} x^T(i) W x(i) \geq \Big(\sum_{i=r_0}^{r} x(i) \Big)^T W \Big(\sum_{i=r_0}^{r} x(i) \Big) \tag{16}$$

with $\tilde{r} = r - r_0 + 1$.

3 Stability Analysis and Controller Design

For closed-loop systems (13), each subsystem is a linear delayed system. The state evaluation between two consecutive switching instants depends on the delayed subsystem. The following theorem give a sufficient condition to guarantee the exponential stability for each subsystem.

Theorem 1 *For given scalars $0 \leq \epsilon_i < 1$, the ith delayed subsystem under the DETM (4) is exponential stable with decay rate λ, if there exist positive definite matrices P_i, R_i, Φ_i, symmetric matrix Q_i such that the following LMIs*

$$R_i + Q_i \geq 0 \tag{17}$$

$$\begin{bmatrix} \frac{P_i}{d_M} + \lambda^{-2d_M} R_i & -\lambda^{-2d_M} R_i \\ * & \lambda^{-2d_M}(2R_i + Q_i) - \lambda^{-2} R_i \end{bmatrix} > 0 \tag{18}$$

$$\begin{bmatrix} \Gamma_{11} & 0 & \Gamma & 0 & A_i^T P_i & \Lambda_1 \\ * & \Gamma_{22} & \Gamma & 0 & 0 & 0 \\ * & * & -2\Gamma + \epsilon_i \Phi_i & 0 & K_i^T B_i^T P_i & \Lambda_2 \\ * & * & * & -\Phi_i & K_i^T B_i^T P_i & \Lambda_2 \\ * & * & * & * & -P_i & 0 \\ * & * & * & * & * & -R_i \end{bmatrix} \leq 0 \tag{19}$$

$$\beta - \lambda^{-2} \leq 0 \tag{20}$$

hold, where

$$\begin{aligned} \Gamma &= \lambda^{-2(d_M+1)} R_i \\ \Gamma_{11} &= -\lambda^{-2} P_i + \lambda^{-2} Q_i - \Gamma \\ \Gamma_{22} &= -\Gamma - \lambda^{-2(d_M+1)} Q_i \\ \Lambda_1 &= \lambda^{-1} d_M (A_i^T - I) R_i \\ \Lambda_2 &= \lambda^{-1} d_M K_i^T B_i^T R_i \end{aligned}$$

Proof: Choosing the following Lyapunov function candidate

$$W(k) = V(k) + \eta(k) \tag{21}$$

with

$$\begin{aligned} V(k) &= V_1(k) + V_2(k) + V_3(k) \\ V_1(k) &= x^T(k) P_i x(k) \\ V_2(k) &= \sum_{s=k-d_M}^{k-1} \lambda^{2(s-k)} x^T(s) Q_i x(s) \\ V_3(k) &= d_M \sum_{s=-d_M+1}^{0} \sum_{r=k+s-1}^{k-1} \lambda^{2(r-k)} \delta^T(r) R_i \delta(r) \end{aligned}$$

where $\delta(k) = x(k+1) - x(k)$.

From the defintion of $V(k)$, it can be easily verified that

$$V(k) \geq \alpha_1 ||x(k)||^2, \quad V(0) \leq \alpha_2 ||\varphi||^2 \tag{22}$$

where α_1 and α_2 are constants.

We first derive the condition that guarantee the positive-definiteness of $W(k)$. Since $\eta(k) \geq 0$, it can be easily seen that $W(k) \geq V(k)$, then

$$V_1(k) = \sum_{s=k-d_M}^{k-1} x^T(k) \frac{P_i}{d_M} x(k) \tag{23}$$

$$V_3(k) \geq \lambda^{-2d_M} \sum_{s=k-d_M}^{k-1} [x(k) - x(s)]^T R_i [x(k) - x(s)], \tag{24}$$

where (24) holds due to the positive definiteness of R_i and the Jensen inequality in Lemma 2.1. Incoperating $V_2(k)$ with (23) and (24) gives

$$\begin{aligned}W(k) \geq \sum_{s=k-d_M}^{k-1} \Big[& x^T(k)(\frac{P}{d_M})x(k) - 2\lambda^{-2d_M} x^T(k) R_i x(s) \\ & + \lambda^{2(s-k)} x^T(s)(Q_i + R_i)x(s) \\ & + (\lambda^{-2d_M} - \lambda^{2(s-k)}) x^T(s) R_i x(s) \Big]\end{aligned}$$

By some appropriate operations, it is easily verified $W(k) > 0$ when (17) and (18) is met.

If $W(k+1) \leq \lambda^{-2} W(k)$ with $\lambda > 1$, then $W(k)$ will converge iteratively to 0 as $k \to \infty$. In the following, we show that (19) and (20) imply $W(k+1) - \lambda^{-2} W(k) \leq 0$.

Let $\xi^T(k) = [x^T(k)\ x^T(k-d_M)\ x^T(k-d(k))\ e^T(k)]$, we can see

$$\begin{aligned} & x(k) = W_1 \xi(k) && x(k-d_M) = W_2 \xi(k) \\ & x(k-d(k)) = W_3 \xi(k) && e(k) = W_4 \xi(k) \\ & \delta(k) = W_5 \xi(k) && x(k+1) = W_6 \xi(k) \\ & x(k) - x(k-d(k)) = W_7 \xi(k) \\ & x(k-d(k)) - x(k-d_M) = W_8 \xi(k) \end{aligned}$$

with

$$\begin{aligned} & W_1 = [I\ 0\ 0\ 0] && W_2 = [0\ I\ 0\ 0] \\ & W_3 = [0\ 0\ I\ 0] && W_4 = [0\ 0\ 0\ I] \\ & W_5 = [A_i - I\ 0\ B_i K_i\ B_i K_i] && W_6 = [A_i\ 0\ B_i K_i\ B_i K_i] \\ & W_7 = [I\ 0\ -I\ 0] && W_8 = [0\ -I\ I\ 0] \end{aligned}$$

Then,

$$\begin{aligned} & V_1(k+1) - \lambda^{-2} V_1(k) \\ & = \xi^T(k)[W_6^T P_i W_6 - \lambda^{-2} W_1^T P_i W_1]\xi(k) && (25) \\ & V_2(k+1) - \lambda^{-2} V_2(k) \\ & = \xi^T(k)[\lambda^{-2} W_1^T Q_i W_1 - \lambda^{-2(d_M+1)} W_2^T Q_i W_2]\xi(k) && (26) \\ & V_3(k+1) - \lambda^{-2} V_3(k) \\ & \leq \lambda^{-2} d_M^2 \xi^T(k) W_5^T R_i W_5 \xi(k) \\ & \quad - d_M \lambda^{-2(d_M+1)} \sum_{s=k-d_M}^{k-1} \delta^T(s) R_i \delta(s) && (27) \\ & \eta(k+1) - \lambda^{-2}\eta(k) \\ & \leq \xi^T(k)[\epsilon_i W_3^T \Phi_i W_3 - W_4^T \Phi_i W_4]\xi(k) && (28) \end{aligned}$$

The inequality (28) holds because of (20) and the positive-definiteness of $\eta(k)$.

Since

$$\begin{aligned} \sum_{s=k-d_M}^{k-1} \delta^T(s) R_i \delta(s) = & \sum_{s=k-d_M}^{k-d(k)-1} \delta^T(s) R_i \delta(s) \\ & + \sum_{s=k-d(k)}^{k-1} \delta^T(s) R_i \delta(s). \end{aligned}$$

By Jensen inequality, it yields

$$\sum_{s=k-d_M}^{k-d(k)-1} \delta^T(s) R_i \delta(s) \geq \Big[\sum_{s=k-d_M}^{k-d(k)-1} \delta(s) \Big]^T \frac{R_i}{d_M} \Big[\sum_{s=k-d_M}^{k-d(k)-1} \delta(s) \Big]$$

$$= \xi^T(k) W_8^T \frac{R_i}{d_M} W_8 \xi(k) \quad (29)$$

$$\sum_{s=k-d(k)}^{k-1} \delta^T(s) R_i \delta(s) \geq \Big[\sum_{s=k-d(k)}^{k-1} \delta(s) \Big]^T \frac{R_i}{d_M} \Big[\sum_{s=k-d(k)}^{k-1} \delta(s) \Big]$$

$$= \xi^T(k) W_7^T \frac{R_i}{d_M} W_7 \xi(k) \quad (30)$$

Combining (25)-(30) gives

$$\begin{aligned} & W(k+1) - \lambda^{-2} W(k) \\ \leq & \xi^T(k) \Big\{ W_6^T P_i W_6 - \lambda^{-2} W_1^T P_i W_1 + \lambda^{-2} W_1^T Q_i W_1 \\ & - \lambda^{-2(d_M+1)} W_2^T Q_i W_2 + \lambda^{-2} d_M^2 W_5^T R_i W_5 \\ & - \lambda^{-2(d_M+1)} [W_8^T R_i W_8 + W_7^T R_i W_7] \Big\} \xi(k) \\ \triangleq & \xi^T(k) \Pi \xi(k) \quad (31) \end{aligned}$$

By Schur complent lemma, it can be easily verified that (19) leads to $\Pi \leq 0$.

For $x_0 = 0$, the exponential stability condition (14) is satisfied with $K = 0$. For $x_0 \neq 0$, iteratively, we obtain

$$||x(k)|| \leq \alpha_1^{-\frac{1}{2}} W(k)^{\frac{1}{2}} \leq \alpha_1^{-\frac{1}{2}} \lambda^{-k} W^{\frac{1}{2}}(0) \leq K \|\varphi\| \lambda^{-k}$$

with $K = \alpha_1^{-\frac{1}{2}} (\alpha_2^{-\frac{1}{2}} + \eta^{-\frac{1}{2}}(0)/\|\varphi\|)$. The expontiential stability then is proved. □

In fact, $\eta(k) \leq W(k)$ and $\eta(k) \geq 0$, then Theorem 1 also indicates that $\eta(k)$ tends to 0 as $k \to 0$.

Remark 2 *We employ the Jensen inequality and the fact that the positive definiteness of the Lyapunov function does not imply the positive definiteness of all the Lyapunov matrices [19], to obtain less conservative results. Some other techniques can be also used to further reduce the conservatism, such as delay-partitioning approach [20], free-weighting matrices [21], reciprocally convex inequality [22], Wirtinger-based integral inequality [23], and some other novel inequalities, see [24, 25] and reference therein.*

Theorem 2 *For given scalars $0 \leq \epsilon_i < 1$ and $\mu \geq 1$, if there exist positive definite matrices P_i, R_i, Φ_i, symmetric matrices Q_i such that the conditions* (18)-(20) *and the following inequalities*

$$P_i - \mu P_j \leq 0;\ \ Q_i - \mu Q_j \leq 0;\ \ R_i - \mu R_j \leq 0 \quad (32)$$

$$\tau_a > \tau_a^* = \frac{\ln \mu}{2 \ln \lambda} \quad (33)$$

hold for all $i, j \in \mathcal{M}$, then the closed-loop systems (13) *under DETM* (4) *are exponentially stable with decay rate λ^t, where $\lambda^t \triangleq \lambda^{1 - \frac{\ln \mu}{2\tau_a \ln \lambda}}$, τ_a is the average dwell time of switching signal $\sigma(k)$ in systems* (13)*.*

Proof: From (18)-(20), we see that each delayed subsystem is exponentially stable. Let $\sigma(k_l) = i$ and $\sigma(k_{l-1}) = j$, then for $k \in [k_l, k_{l+1})$,

$$\begin{aligned} W(\sigma(k), k) & < \lambda^{-2(k-k_l)} W(i, k_l) \\ & \leq \mu \lambda^{-2(k-k_l)} W(j, k_l) \\ & < \mu \lambda^{-2(k-k_{l-1})} W(j, k_{l-1}) \\ & \cdots \end{aligned}$$

$$
\begin{aligned}
&\le \mu^{N_\sigma(k,0)}\lambda^{-2k}W(\sigma(0),0)\\
&\le \mu^{N_0+\frac{k}{\tau_a}}\lambda^{-2k}W(\sigma(0),0)\\
&= \lambda^{-2k(1-\frac{\ln\mu}{2\tau_a\ln\mu})}\mu^{N_0}W(\sigma(0),0)\\
&= (\lambda^t)^{-2k}\mu^{N_0}W(\sigma(0),0) \qquad (34)
\end{aligned}
$$

Following similar lines as in the proof of the exponential stability in Theorem 1, we can easily show the exponential stability of systems (13). □

Remark 3 *From the proof, we can see that if the conditions in Theorem 2 expect for* (20) *are satisfied, the closed-loop systems* (13) *under the SETM* (3) *with the same paramaters including ϵ_i and Φ_i, are also exponentially stable.*

Theorem 3 *For given scalars $0 \le \epsilon_i < 1$ and $\mu \ge 1$, the closed-loop systems* (13) *under the DETM* (4) *are exponential stable with decay rate λ^t if there exist positive definite matrices S_i, $\bar{R}_i$, $\bar{\Phi}_i$, symmetric matrices $\bar{Q}_i$ such that* (20), (33) *and the following inequalities*

$$\bar{R}_i + \bar{Q}_i \ge 0 \quad (35)$$

$$\begin{bmatrix} \frac{S_i}{d_M}+\lambda^{-2d_M}\bar{R}_i & -\lambda^{-2d_M}\bar{R}_i \\ * & \lambda^{-2d_M}(2\bar{R}_i+\bar{Q}_i)-\lambda^{-2}\bar{R}_i \end{bmatrix} > 0 \quad (36)$$

$$\begin{bmatrix} \bar{\Gamma}_{11} & 0 & \bar{\Gamma} & 0 & S_iA_i^T & \lambda^{-1}d_MS_i(A_i^T-I) \\ * & \bar{\Gamma}_{22} & \bar{\Gamma} & 0 & 0 & 0 \\ * & * & -2\bar{\Gamma}+\epsilon_i\bar{\Phi}_i & 0 & Y_iB_i^T & \lambda^{-1}d_MY_iB_i^T \\ * & * & * & -\bar{\Phi}_i & Y_iB_i^T & \lambda^{-1}d_MY_iB_i^T \\ * & * & * & * & -S_i & 0 \\ * & * & * & * & * & \bar{R}_i-2S_i \end{bmatrix} \le 0 \quad (37)$$

$$S_i - \mu S_j \le 0;\ \ \bar{Q}_i - \mu\bar{Q}_j \le 0;\ \ \bar{R}_i - \mu\bar{R}_j \le 0 \quad (38)$$

hold for any $i, j \in \mathcal{M}$. Then, the mode-dependent state-feedback control gains are given by

$$K_i = Y_i^T S_i^{-1} \quad (39)$$

where τ_a, λ^t are the same defined in Theorem 2.

Proof: Define $S_i = P_i^{-1}$, $\bar{Q}_i = P_i^{-1}Q_iP_i^{-1}$, $\bar{R}_i = P_i^{-1}R_iP_i^{-1}$, $\bar{\Phi}_i = P_i^{-1}\Phi_iP_i^{-1}$, $Y_i = S_iK_i^T$. Pre- and post-multiplying (19) with $diag[P_i^{-1}\ P_i^{-1}\ P_i^{-1}\ P_i^{-1}\ P_i^{-1}\ R_i^{-1}]$ and its transpose respectively and noting that

$$-R_i^{-1} \le \bar{R}_i - 2S_i, \quad (40)$$

we can verify the correctness of (37). In fact, (40) can be verified by $(P_i^{-1}R_i - I)R_i^{-1}(R_iP_i^{-1} - I) \ge 0$. (36) and (38) can be derived from (18) and (32) by a similar method. This completes the proof. □

4 Numerical Example

The designed control gains are also suitable to the switched systems under SETM (3). In the following example, we show that the switched systems with DETM will enlarge the release interval, reduce the number of transmission, when compared to the ones with SETM.

Example 1 *Consider the discrete-time switched linear systems with two subsystems described by*

$$A_1 = \begin{bmatrix} 0.83 & -0.05 \\ 0.04 & 1.02 \end{bmatrix} \quad A_2 = \begin{bmatrix} 0.68 & 0.14 \\ -0.13 & 0.87 \end{bmatrix}$$

$$B_1 = \begin{bmatrix} -0.1 \\ 0.2 \end{bmatrix} \qquad B_2 = \begin{bmatrix} 0 \\ 0.1 \end{bmatrix}$$

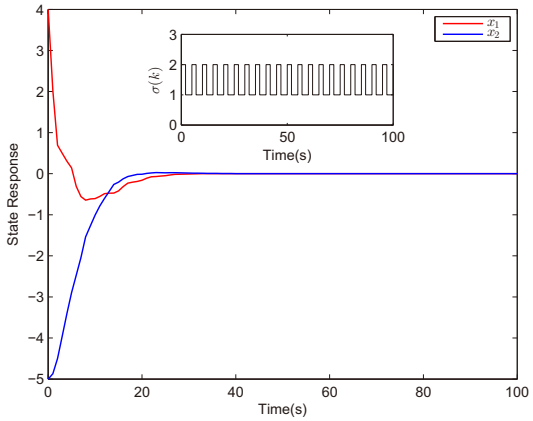

Fig. 2: State responses of the system (13) under SETM

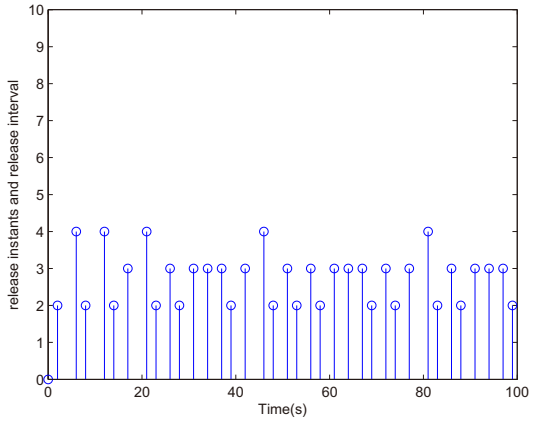

Fig. 3: Triggering instants and triggering intervals of the system (13) under SETM

and suppose that the initial state is $x(0) = [4\ \ -5]^T$.

Provided that $\epsilon_1 = 0.3$, $\epsilon_2 = 0.7$, $\lambda = 1.01$, $\mu = 1.03$ and the upper bound of the equivalent delay is $\bar{\tau} = 2$, i.e. $d_M = 3$. Then, the ADT can be calculated as $\tau_a = \frac{\ln\mu}{2\ln\lambda} \approx 1.5$. By Theorem 2 and Theorem 3, the control gains and event-triggered matrices are

$$K_1 = \begin{bmatrix} -0.0389 & -0.6378 \end{bmatrix} \quad K_2 = \begin{bmatrix} 0.1497 & -0.1251 \end{bmatrix}$$

$$\Phi_1 = \begin{bmatrix} 0.4762 & 0.0053 \\ 0.0053 & 0.8275 \end{bmatrix} \quad \Phi_2 = \begin{bmatrix} 0.3439 & 0.0158 \\ 0.0158 & 0.2523 \end{bmatrix}$$

We first consider the SETM (3)*, the switching signal and state response are shown in Fig.2, the release instants and release interval are shown in Fig.3. We see that the number of transmission is* 37*, which reduce* 63 *times of transmission compared with the time-triggered mechanism.*

Next, we implement the system with the DETM (4)*. Provided that $\eta_0 = 2$, $\beta = 0.8$ and $\theta = 1.5$, which meet the condition $\beta - \frac{1}{\theta} > 0$ and* (20)*. The switching signal and state response are shown in Fig.4, the release instants and release interval are shown in Fig.5. In this scenario, the we only need to transmit* 12 *times. From this we can see that the dynamic event-triggered mechanism has more advantage compared to the static one.*

5 Conclusions

A mode-dependent DETM has been designed to reduce the amount of packet transitions between the sensor and the

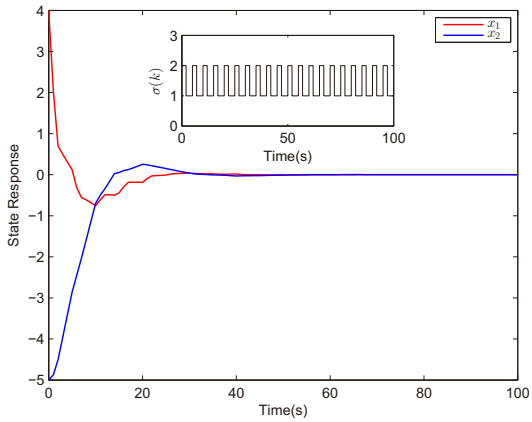

Fig. 4: State responses of the system (13) under DETM

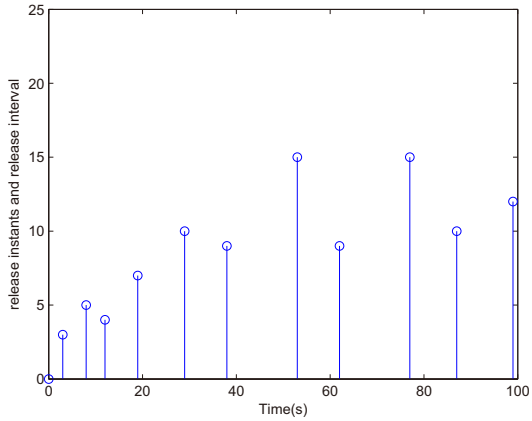

Fig. 5: Triggering instants and triggering intervals of the system (13) under DETM

controller. The parameters of DETM and control gains co-design conditions have been obtained. In this work the plant is described by switched linear systems and the actuator knows current activated mode, making it possible to formulate the closed-loop systems as synchronous switched linear systems with delays. The future work will consider cases such as nonlinear plant and unknown mode information to the actuator.

References

[1] R. A. DeCarlo, M. S. Branicky, S. Pettersson, and B. Lennartson, "Perspectives and results on the stability and stabilizability of hybrid systems," in *Proc. IEEE: Special Issue Hybrid Syst.*, vol. 88, pp. 1069–1082, 2000.

[2] H. Lin and P. J. Antsaklis, "Stability and stabilizability of switched linear systems: a survey of recent results," *IEEE Trans. Autom. Control*, vol. 54, no. 2, pp. 308–322, 2009.

[3] Y. Kang, D. Zhai, G. Liu, and Y. Zhao, "On input-to-state stability of switched stochastic nonlinear systems under extended asynchronous switching," *IEEE Trans. Cybern.*, vol. 46, no. 5, pp. 1092–1105, 2016.

[4] L. Zhang, H. Gao, and O. Kaynak, "Network-induced constraints in networked control systems-a survey," *IEEE Trans. Ind. Inf*, vol. 9, no. 1, pp. 403–416, 2013.

[5] Y. Xia, Y. Gao, L. Yan, and M. Fu, "Recent progress in networked control systems-A survey," *Int. J. Autom. Comput.*, vol. 12, no. 4, pp. 343–367, 2015.

[6] J. Araújo, M. Mazo, A. Anta, P. Tabuada, and K. H. Johansson, "System architectures, protocols and algorithms for aperiodic wireless control systems," *IEEE Trans. Ind. Inf*, vol. 10, no. 1, pp. 175–184, 2014.

[7] P. Tabuada, "Event-triggered real-time scheduling of stabilizing control tasks," *IEEE Trans. Autom. Control*, vol. 52, no. 9, pp. 1680–1685, 2007.

[8] M. Velasco, P. Martí, and E. Bini, "On Lyapunov sampling for event-driven controllers," in *Proc. Joint IEEE Conf. Decision and Control and Chinese Control Conf.*, pp. 6238–6243, 2009.

[9] W. Heemels, K. H. Johansson, and P. Tabuada, "An introduction to event-triggered and self-triggered control," in *Proc. IEEE Conf. Decision Control*, pp. 3270–3285, 2012.

[10] W. Heemels, M. Donkers, and A. R. Teel, "Periodic event-triggered control for linear systems," *IEEE Trans. Autom. Control*, vol. 58, no. 4, pp. 847–861, 2013.

[11] A. Girard, "Dynamic triggering mechanisms for event-triggered control," *IEEE Trans. Autom. Control*, vol. 60, no. 7, pp. 1992–1997, 2015.

[12] S. Hu, D. Yue, X. Yin, X. Xie, and Y. Ma, "Adaptive event-triggered control for nonlinear discrete-time systems," *Int. J. Robust Nonlinear Control*, vol. 26, no. 18, pp. 4104–4125, 2016.

[13] D. Yue, E. Tian, and Q.-L. Han, "A delay system method for designing event-triggered controllers of networked control systems," *IEEE Trans. Autom. Control*, vol. 58, no. 2, pp. 475–481, 2013.

[14] A. Xue, H. Wang, and R. Lu, "Event-based H_∞ control for discrete Markov jump systems," *Neurocomputing*, vol. 190, pp. 165–171, 2016.

[15] Y. Shi and B. Yu, "Output feedback stabilization of networked control systems with random delays modeled by Markov chains," *IEEE Trans. Autom. Control*, vol. 54, no. 7, pp. 1668–1674, 2009.

[16] C. Peng, Y. Tian, and D. Yue, "Output feedback control of discrete-time systems in networked environments," *IEEE Trans. Syst., Man, Cybern. A, Syst. Humans*, vol. 41, no. 1, pp. 185–190, 2011.

[17] J. Xiong and J. Lam, "Stabilization of networked control systems with a logic ZOH," *IEEE Trans. Autom. Control*, vol. 54, no. 2, pp. 358–363, 2009.

[18] S. Hu, Y. Zhang, and Z. Du, "Network-based H_∞ tracking control with event-triggering sampling scheme," *IET Control Theory Appl.*, vol. 6, no. 4, pp. 533–544, 2012.

[19] S. Xu, J. Lam, B. Zhang, and Y. Zou, "New insight into delay-dependent stability of time-delay systems," *Int. J. Robust Nonlinear Control*, vol. 25, no. 7, pp. 961–970, 2015.

[20] P. Li, Y. Kang, Y. Zhao, H. Xi, and J. Wang, "Improved results on stability of markovian jump systems with time-varying delays," in *2016 12th IEEE International Conference on Control and Automation (ICCA)*, pp. 626–631, 2016.

[21] Y. He, Q.-G. Wang, L. Xie, and C. Lin, "Further improvement of free-weighting matrices technique for systems with time-varying delay," *IEEE Trans. Autom. Control*, vol. 52, no. 2, pp. 293–299, 2007.

[22] P. Park, J. W. Ko, and C. Jeong, "Reciprocally convex approach to stability of systems with time-varying delays," *Automatica*, vol. 47, no. 1, pp. 235–238, 2011.

[23] A. Seuret and F. Gouaisbaut, "Wirtinger-based integral inequality: application to time-delay systems," *Automatica*, vol. 49, no. 9, pp. 2860–2866, 2013.

[24] X. Liu, F. Wang, and M. Tang, "Auxiliary function-based summation inequalities and their applications to discrete-time systems," *Automatica*, vol. 78, pp. 211–215, 2017.

[25] A. Seuret and F. Gouaisbaut, "Hierarchy of LMI conditions for the stability analysis of time delay systems," *Sys. Contr. Lett.*, vol. 81, pp. 1–7, 2015.

1. Dynamic event-triggered control for networked switched linear systems

Accession number: 20174404320783
Authors: Li, Pengfei (1); Kang, Yu (1, 2); Zhao, Yun-Bo (3); Zhou, Jian (1)
Author affiliation: (1) Department of Automation, University of Science and Technology of China, Hefei; 230027, China; (2) State Key Laboratory of Fire Science, University of Science and Technology of China, Hefei; 230027, China; (3) College of Information Engineering, Zhejiang University of Technology, Hangzhou; 310014, China
Source title: Chinese Control Conference, CCC
Abbreviated source title: Chinese Control Conf., CCC
Part number: 1 of 1
Issue title: Proceedings of the 36th Chinese Control Conference, CCC 2017
Issue date: September 7, 2017
Publication year: 2017
Pages: 7984-7989
Article number: 8028619
Language: English
ISSN: 19341768
E-ISSN: 21612927
ISBN-13: 9789881563934
Document type: Conference article (CA)
Conference name: 36th Chinese Control Conference, CCC 2017
Conference date: July 26, 2017 - July 28, 2017
Conference location: Dalian, China
Conference code: 130846
Sponsor: Dalian University of Technology; Systems Engineering Society of China (SESC); Technical Committee on Control Theory (TCCT), Chinese Association of Automation (CAA)
Publisher: IEEE Computer Society
Abstract: A class of discrete-time networked switched control systems are investigated with event-triggered control. The closed-loop system is formulated as switched linear systems with time-varying delays, based on which the exponential stability conditions are obtained under the time delay system framework. The co-design conditions of the control gain and the triggering parameters are proposed. Finally, a comparison between the static event-triggered mechanism and the dynamic one is illustrated by a numerical example. © 2017 Technical Committee on Control Theory, CAA.
Number of references: 25
DOI: 10.23919/ChiCC.2017.8028619
Compendex references: YES
Database: Compendex
Compilation and indexing terms, Copyright 2017 Elsevier Inc.
Data Provider: Engineering Village